ISSN: 2454-1907
Impact Factor: 1.745 (I2OR)

International Journal of Engineering Technologies and Management Research
A knowledge Repository
IJETMR

SIMULATION & PERFORMANCE OF THREE PHASE HALF CONTROLLED CONVERTER WITH D.C. MOTOR

Abhishek Kumar Patel [*1]
[*1] Research scholar, Fourth Semester ME (Control System), Jabalpur Engineering College, Jabalpur (M.P) 482011, INDIA

Abstract:
This paper presents performance result of single and three phase rectifier circuits using MATLAB-SIMULINK which are one of the most used power electronics circuit. This paper also describes method & concepts used to simulate power electronic circuits using the SIMULINK toolbox within MATLAB software. The use of tool like MATLAB-SIMULINK has always been a useful for analyzing and designing different circuits. The paper presents the performance of three phase rectifier circuits in term of its output voltage, current.

Keywords:
Three-phase half controlled converter, D.C. motor, simulation.

Cite This Article: Abhishek Kumar Patel, "SIMULATION & PERFORMANCE OF THREE PHASE HALF CONTROLLED CONVERTER WITH D.C. MOTOR" *International Journal of Engineering Technologies and Management Research*, Vol. 2, No. 5(2015): 1-5.

1. INTRODUCTION

The Rectifier is the power electronic circuit which is highly used in all power supply units. All the modern power controlled circuits like simple fan regulator to DC motor drive use the concept of phase control through which power to the output is controlled. This type of rectifier is called controlled rectifier. For controlled rectifier modern devices like SCR and TRIAC are used, which can control the output voltage and current by providing the necessary pulse at appropriate angle.
This method may be suitable for low power applications it is unsuitable to applications which need a "steady and smooth" DC supply voltage. One method to improve on this is to use every half-cycle of the input voltage instead of every other half-cycle. The circuit which allows us to do this is called a Full Wave Rectifier.

ISSN: 2454-1907
Impact Factor: 1.745 (I2OR)

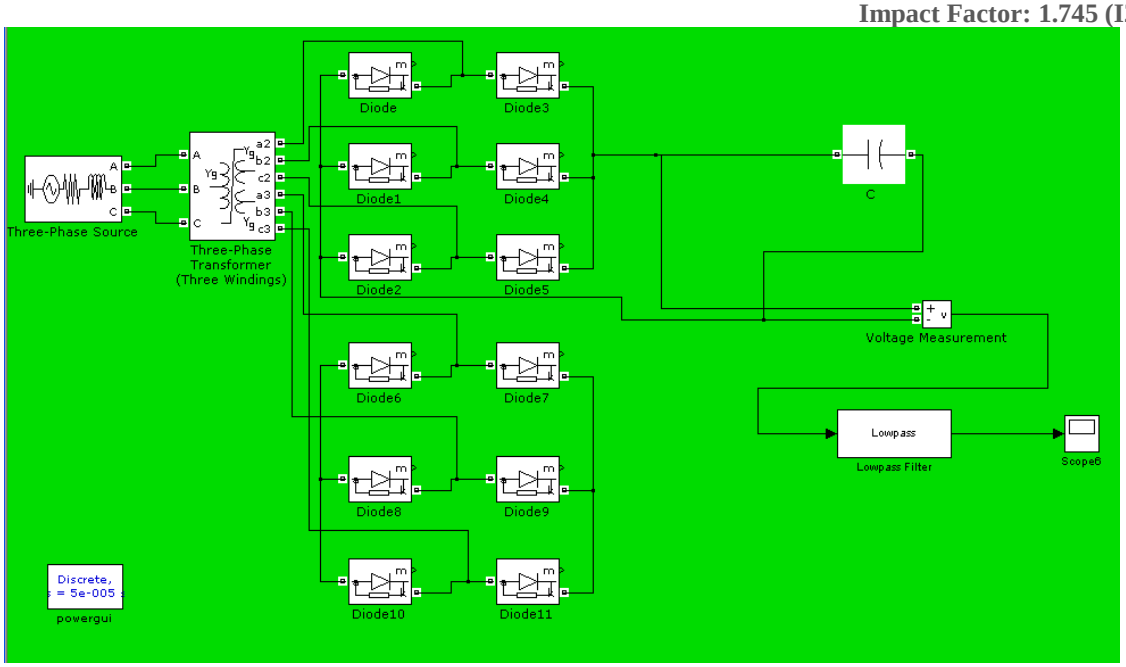

Figure.1: Modelling

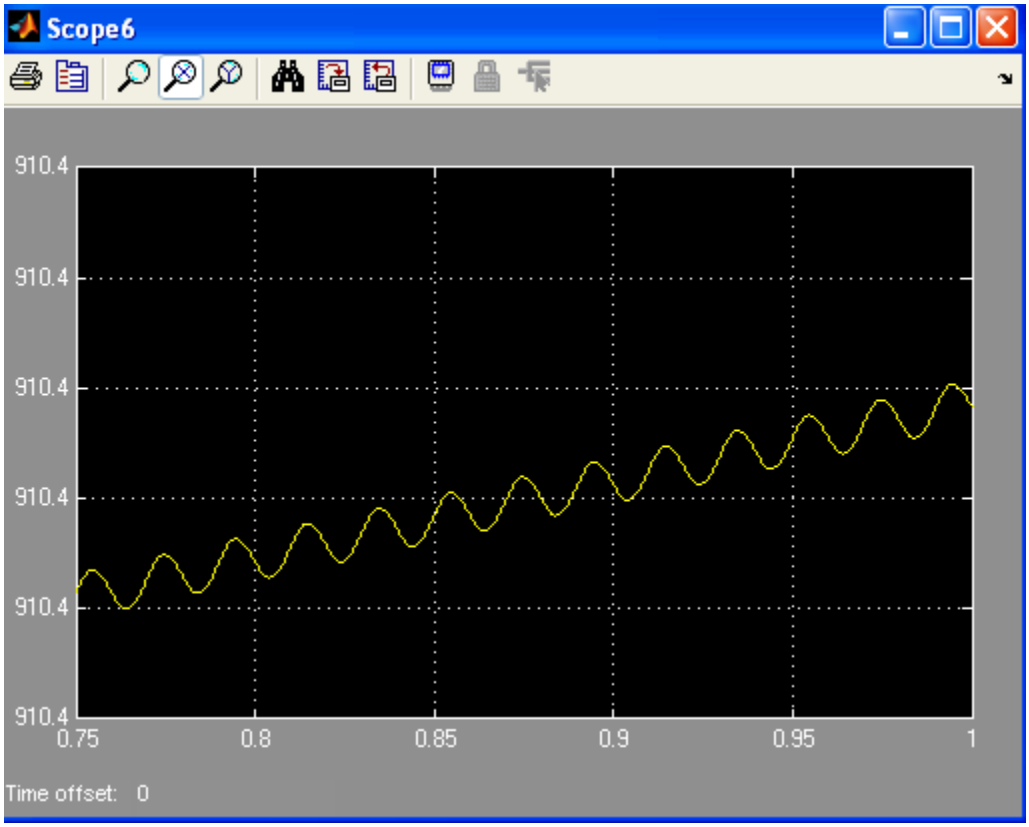

Figure.2: display

ISSN: 2454-1907
Impact Factor: 1.745 (I2OR)

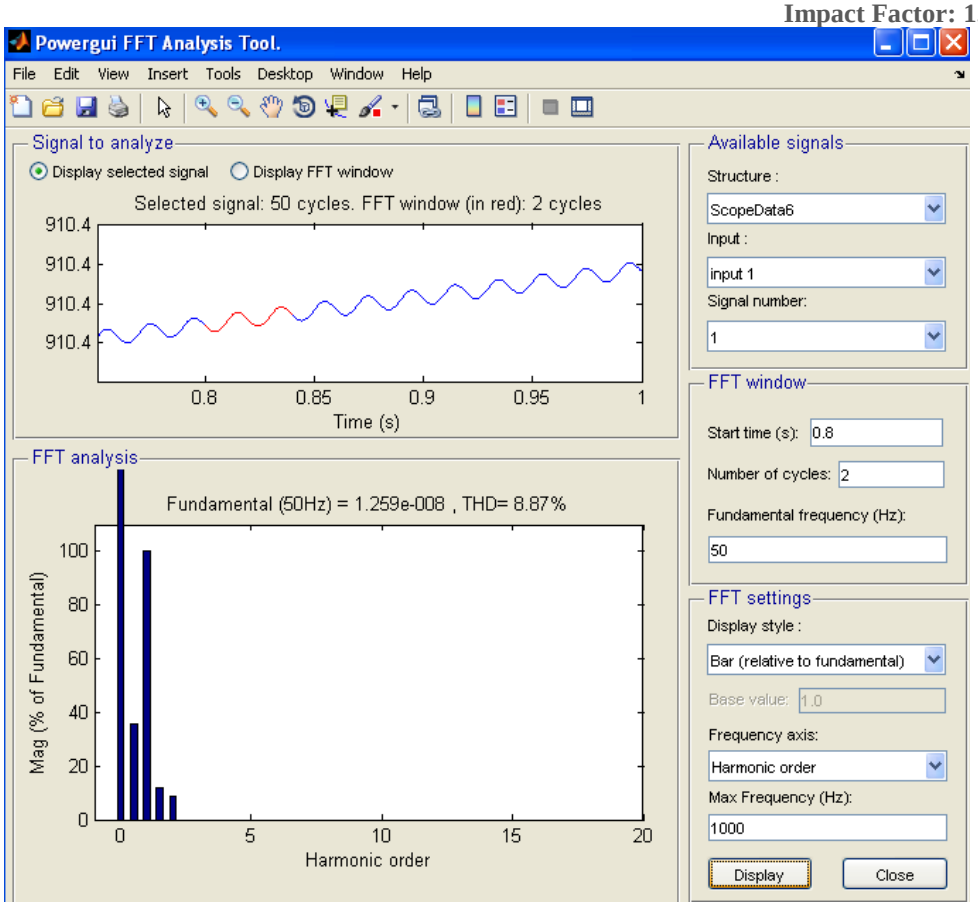

Figure.3: FFT Analysis Tool

Table.1: *Results*

With capacitor 47uf , 1000v (47uf = 4.7e-05)

Sr.No.	**Voltage**	**D C**
1	Approximate Voltage	910.4 VDC

2. DC MOTOR

A DC motor is any of a class of electrical machines that converts direct current electrical power into mechanical power. The most common types rely on the forces produced by magnetic fields. Nearly all types of DC motors have some internal mechanism, either electromechanical or electronic, to periodically change the direction of current flow in part of the motor. Most types produce rotary motion; a linear motor directly produces force and motion in a straight line.

DC motors were the first type widely used, since they could be powered from existing direct-current lighting power distribution systems. A DC motor's speed can be controlled over a wide range, using either a variable supply voltage or by changing the strength of current in its field windings. Small DC motors are used in tools, toys, and appliances. The universal motor can operate on direct current but is a lightweight motor used for portable power tools and appliances. Larger DC motors are used in propulsion of electric vehicles, elevator and hoists, or in drives for

steel rolling mills. The advent of power electronics has made replacement of DC motors with AC motors possible in many applications.
Electromagnetic motors

A coil of wire with a current running through it generates an electromagnetic field aligned with the center of the coil. The direction and magnitude of the magnetic field produced by the coil can be changed with the direction and magnitude of the current flowing through it.

A simple DC motor has a stationary set of magnets in the stator and an armature with one or more windings of insulated wire wrapped around a soft iron core that concentrates the magnetic field. The windings usually have multiple turns around the core, and in large motors there can be several parallel current paths. The ends of the wire winding are connected to a commutator . The commutator allows each armature coil to be energized in turn and connects the rotating coils with the external power supply through brushes. (Brushless DC motors have electronics that switch the DC current to each coil on and off and have no brushes.)

PERMANENT MAGNET STATORS

A PM motor does not have a field winding on the stator frame, instead relying on PMs to provide the magnetic field against which the rotor field interacts to produce torque. Compensating windings in series with the armature may be used on large motors to improve commutation under load. Because this field is fixed, it cannot be adjusted for speed control. PM fields (stators) are convenient in miniature motors to eliminate the power consumption of the field winding. Most larger DC motors are of the "dynamo" type, which have stator windings. Historically, PMs could not be made to retain high flux if they were disassembled; field windings were more practical to obtain the needed amount of flux. However, large PMs are costly, as well as dangerous and difficult to assemble; this favors wound fields for large machines.

To minimize overall weight and size, miniature PM motors may use high energy magnets made with neodymium or other strategic elements; most such are neodymium-iron-boron alloy. With their higher flux density, electric machines with high-energy PMs are at least competitive with all optimally designed singly fed synchronous and induction electric machines. Miniature motors resemble the structure in the illustration, except that they have at least three rotor poles (to ensure starting, regardless of rotor position) and their outer housing is a steel tube that magnetically links the exteriors of the curved field magnets.

3. CONCLUSION

The design of ac to dc three phase half controlled Converter was simulated in MATLAB-SIMULINK. We are finding out the 910.4 VDC Approximate by using of capacitor 47uf, 1000v .These Converters are used in many industrial applications where controllable dc power required.

4. REFERENCE

[1] “ Power Simulator Software (PSIM) user guides’’.

[2] *D.Venkatasubramanian, S. P. Natarajan, B. Baskaran S. Suganya, Dual Converter Controlled Single Phase Matrix Converter Fed Dc Drive, ARPN Journal of Engineering and Applied Sciences, 7, June 2012.*

[3] *Mehran Mirjafari, Robert S. Balog, Multi-objective design optimization of renewable energy system inverters using a Descriptive language for the components, Applied Power Electronics Conference and Exposition (APEC), 2011 Twenty-Sixth Annual IEEE, pp.1838 – 1845.*

[4] *F. Blaabjerg, F. Iov, T. Kerekes, R. Teodorescu, ,Trends in power electronics and control of renewable energy systems, Power Electronics and Motion Control Conference (EPE/PEMC), 2010, pp. K-1 - K-19.*

[5] *Maria IMECS, Csaba SZABO, Ioan Iov INCZE, Modeling and simulation of controlled bi-directional power electronic converters in a DC energy distribution line with AC grid- and motor-side active filtering, Power Electronics and Applications, 2007 ,pp.1–10.*

[6] *R.S. Ramshaw, Power Electronics Semiconductor Switches (Chapman & Hall, London, 1993).*

[7] *P.C. Sen, Power Electronics (Tata McGraw-Hill, 1988).*

[8] *J. Schaefer, Rectifier Circuits: Theory and Design (Wiley, 1965).*

[9] *G.J. Wakileh, Power Systems Harmonics (Springer, 2001).*

[10] *M.H. Rashid (ed.), Power Electronics Handbook (Academic Press, 2001)*

[11] *A.W. Kelley and W.F. Yadusky, Phase-controlled rectifier linecurrent harmonics and power factor as a function of firing angle and output filter inductance, Proc. APEC'90.*

[12] *Eupec, Rectifier diode D 2601N, BIP AC / SM PB, 2002-05-31, Eupec Data Sheet.*

[13] *Eupec, Phase control thyristor T 2871N, BIP AM / SM PB, 2002-04- 07, Eupec Data Sheet.*

[14] *Powerex Inc., FT1500AU-240 Ultra high voltage thyristor, Powerex Data Sheet.*

[15] *R.W. Wall and H.L. Hess, Design and microcontroller implementation of a three-phase SCR power converter, Idaho University, Department of Electrical Engineering.*